Drawing

	Batch #	Appliance part#
Hendi B.V. Innovatielaan 6 6745XW De Klomp The Netherlands	000000 and up	236925
	Description	
	Back bar refigerator (Silver) with single door (hinge)	

Date	08-10-2026	**Revision #**	V.01
Revision	First Bill of Materials (BOM)		

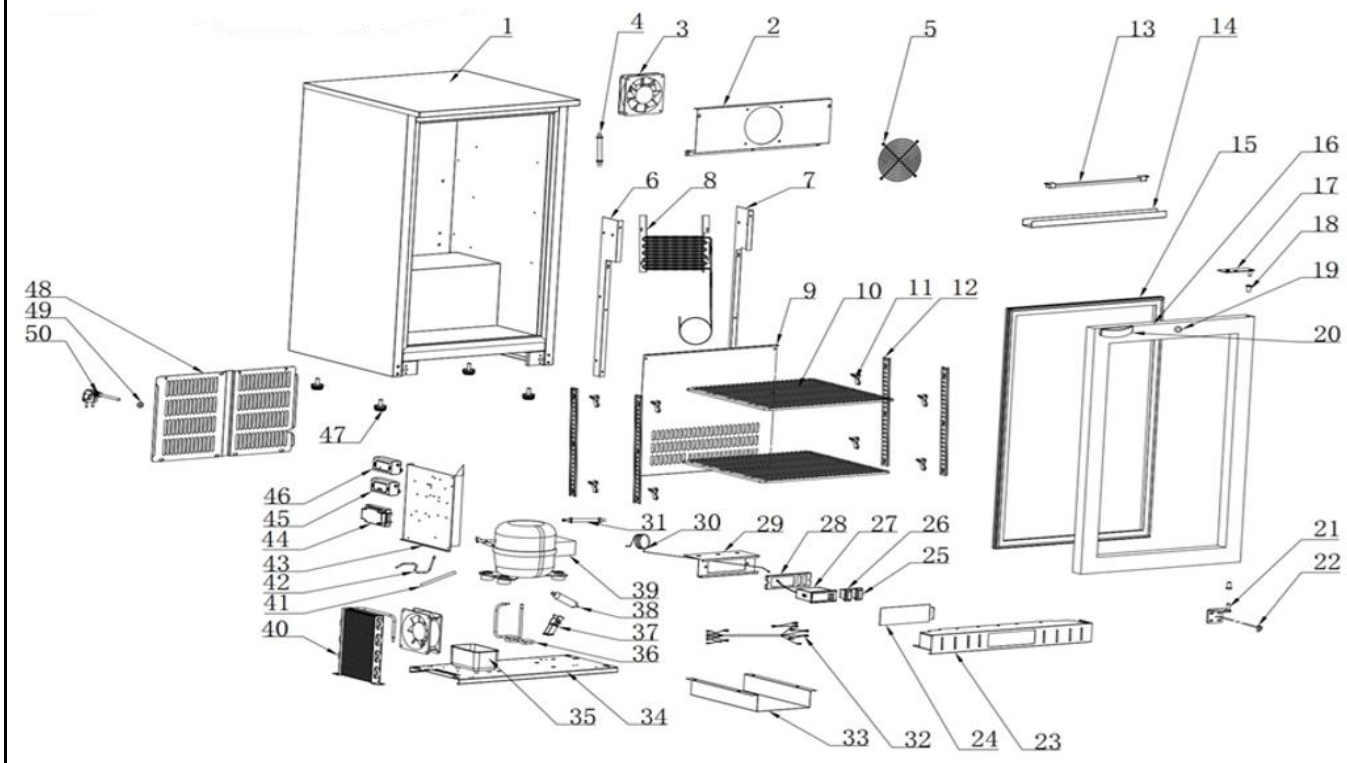

Bill of materials (BOM)

Hendi B.V.
Innovatielaan 6
6745XW De Klomp
The Netherlands

Batch #	Appliance part#
000000 and up	236925
Description	
Back bar refigerator (Silver) with single door (hinge)	

Date	08-10-2026	**Revision #**	V.01
Revision	First Bill of Materials (BOM)		

Item	Description	Part#	Quantity	Remark	Picture
1	Cabinet	n/a	1		
2	Fan bracket	n/a	1		
3	Fan (evaporator)	962732	2		
4	Fan wiring	n/a	1		
5	Fan cover	n/a	1		
6	Deflector bracket (left)	n/a	1		
7	Deflector bracket (right)	n/a	1		
8	Evaporator	n/a	1		
9	Deflector	n/a	1		
10	Shelf (white)	978382	2		
11	Shelf holder (white)	978405	8		
12	Shelfholder bracket	n/a	4		
13	LED light	978481	1		
14	LED light cover	n/a	1		
15	Door gasket	978399	1		
16	Door	978405	1		
17	Right upper door hinge	n/a	1		
18	Door pivot sleeve	n/a	2		
19	Key and lock	962824	1	Include keys	
20	Door handle	n/a	1		
21	Right lower door hinge	n/a	1		
22	Bracket	n/a	1		
23	Front panel	n/a	1		
24	Cover control unit	n/a	1		
25	Switch (power)	978443	1	Red	
26	Switch (LED light)	978450	1	Green	
27	Digital controler	962770	1		
28	Conrtol panel	n/a	1		
29	Conrtol panel bracket	n/a	1		
30	Temperature probe	962787	1		
31	Wire harness (compressor)	n/a	1		
32	Wire harness (controller)	n/a	1		
33	Bracket	n/a	1		
34	Compressor base	n/a	1		
35	Water tray	n/a	1		
36	Coolant pipe	n/a	1		
37	Dryer filter bracket	n/a	1		
38	Dryer filter	n/a	1		
39	Compressor	962749	1		
40	Condenser	n/a	1		
41	Coolant pipe	n/a	1		
42	Coolant pipe	n/a	1		
43	Mounting bracket	n/a	1		
44	Connection box	n/a	1		
45	LED driver	962756	1		
46	Power supply	962763	1		
47	Feet	962800	4		
48	Housing cover (back)	n/a	1		
49	Grommet	n/a	1		
50	Power cord	n/a	1		

n/a -> not available **nss -> not sold separately**

Circuit diagram

	Batch #	Appliance part#
Hendi B.V. Innovatielaan 6 6745XW De Klomp The Netherlands	000000 and up	236925
	Description	
	Back bar refigerator (Silver) with single door (hinge)	

Date	08-10-2026	**Revision #**	V.01
Revision	First Bill of Materials (BOM)		

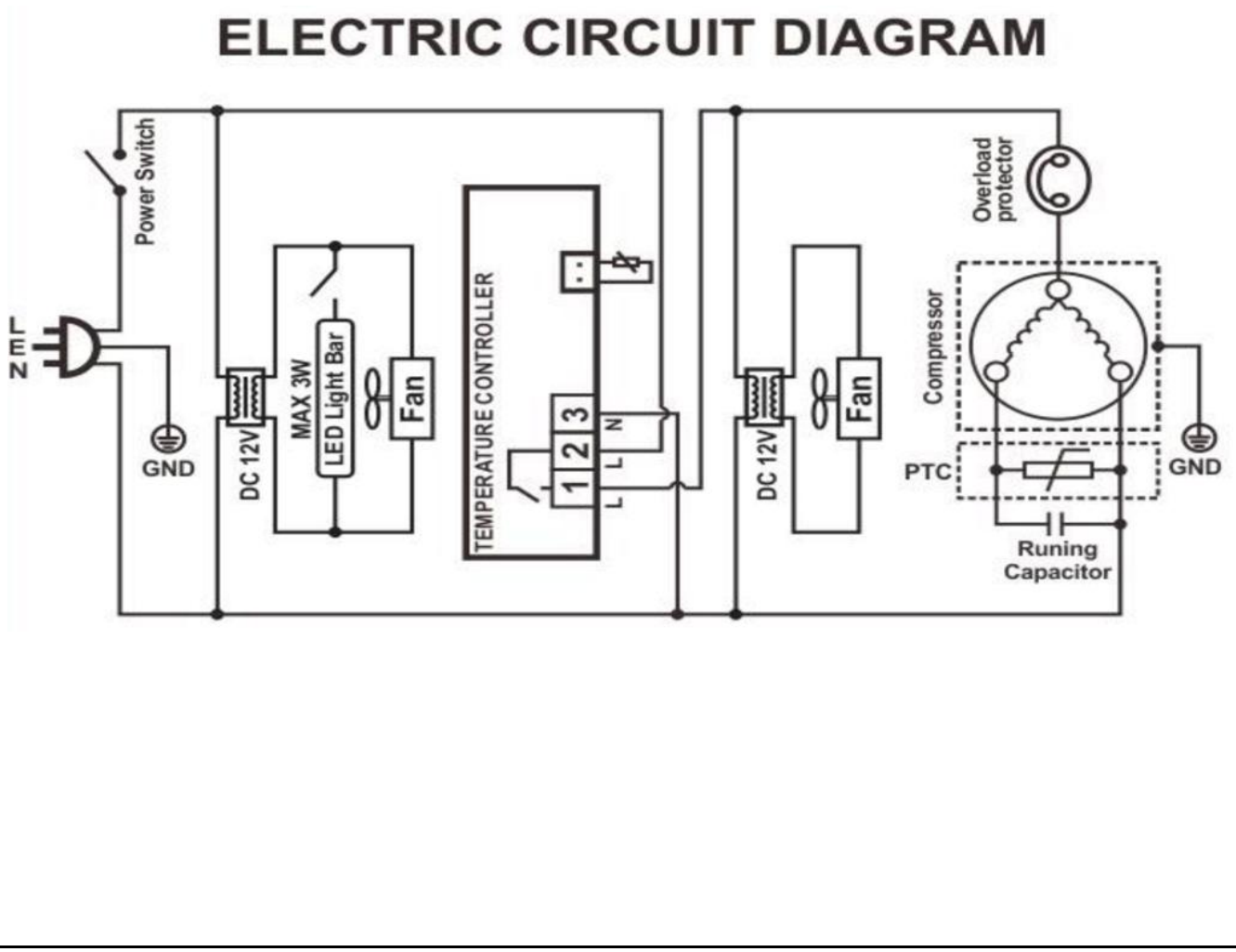

Dimensional drawing

Hendi B.V. Innovatielaan 6 6745XW De Klomp The Netherlands	**Batch #**	**Appliance part#**
	000000 and up	236925
	Description	
	Back bar refigerator (Silver) with single door (hinge)	

Date	08-10-2026	**Revision #**	V.01
Revision	First Bill of Materials (BOM)		

