**Drawing**

| | Batch # | Appliance part# |
|---|---|---|
| **Hendi B.V.**<br>Steenoven 21<br>3911 TX Rhenen<br>The Netherlands | HK-0907-19 and up | 231852 |
| | **Description** | |
| | Vegetable cutter heavy duty | |

| | | | |
|---|---|---|---|
| **Date** | 25-11-2026 | **Revision #** | 1.1_3 |
| **Revision** | Format updated<br>25-11-2026 Ceated set for upper housing | Added new PCB and capacitor | |

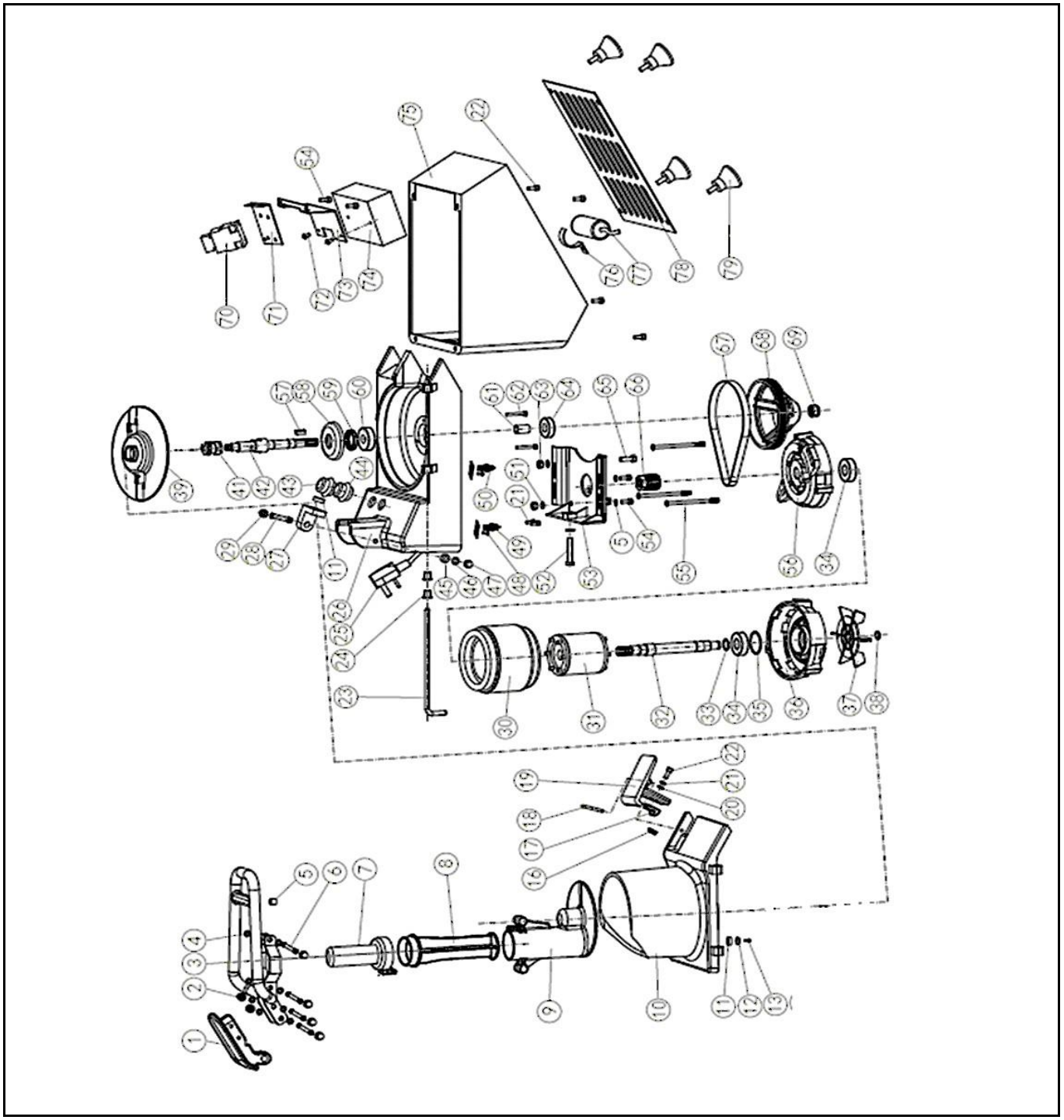

## Bill of materials (BOM)

| | Batch # | Appliance part# |
|---|---|---|
| **Hendi B.V.**<br>Steenoven 21<br>3911 TX Rhenen<br>The Netherlands | HK-0907-19 and up | 231852 |
| | **Description** | |
| | Vegetable cutter heavy duty | |

| | | | |
|---|---|---|---|
| **Date** | 25-11-2026 | **Revision #** | 1.1_3 |
| **Revision** | Format updated Added new PCB and capacitor 25-11-2026 Ceated set for upper housing | | |

| Item | Description | Part# | Quantity | Remark | Picture |
|---|---|---|---|---|---|
| 1 | Elbow (Aluminium) | n/a | 1 | | |
| 2 | Domed nut M6 | nss | 8 | Available as 936528 | |
| 3 | Handlebar (stainless steel) | 936528 | 1 | Include item 2,4,5 and 6 | |
| 4 | Washer M6 | nss | 8 | Available as 936528 | |
| 5 | Bumper nylon | nss | 1 | Available as 936528 | |
| 6 | Strud M6x50 | nss | 4 | Available as 936528 | |
| 7 | Stick grip | 936535 | 1 | Incl item 8 | |
| 8 | Stick | nss | 1 | Availbale as 936535 | |
| 9 | Hopper | 936542 | 1 | | |
| 10 | Lid | nss | 1 | Available as 936573 | |
| 11 | Magnet holder | nss | 1 | Available as 918838 | |
| 12 | Magnet | 918838 | 1 | Include item 11 | |
| 13 | Flat countersunk screw M4x10 | n/a | 1 | | |
| 16 | Spring | nss | 1 | | |
| 17 | Hook | nss | 1 | | |
| 18 | Pin Ø5x85mm | nss | 1 | | |
| 19 | Lid assembly | 936573 | 1 | Includes item 10, 16-22 and 26 | |
| 20 | Washer M6 | nss | 1 | | |
| 21 | Spring washer M6 | nss | 1 | | |
| 22 | Hexagon cap screw M6x15 | nss | 1 | | |
| 23 | Hinge pin | 936665 | 1 | | |
| 24 | Nylon inserts | n/a | 2 | | |
| 25 | Power cord (H05VV-F 3Gx0,75mm²) | 931189 | 1 | | |
| 26 | Upper housing | nss | 1 | Available as 936573 | |
| 27 | Magnet holder | n/a | 1 | | |
| 28 | Strud M8x85 | 943311 | 1 | | |
| 29 | Dome nut M8 | nss | 2 | Available as 943311 | |
| 30 | Motor complete assembly | 936580 | 1 | Include items, 31~38, 55, 56 and 66 | |
| 31 | Rotor | nss | 1 | Available in 936580 | |
| 32 | Axle | nss | 1 | Available in 936580 | |
| 33 | Spring washer Ø 20 | nss | 2 | Available in 936580 | |
| 34 | Bearing (6204RZ) | nss | 2 | Available in 936580 | |
| 35 | Waved washer | nss | 2 | Available in 936580 | |
| 36 | Bottom cover motor | nss | 1 | Available in 936580 | |
| 37 | Fan | nss | 1 | Available in 936580 | |
| 38 | Snap ring | nss | 1 | Available in 936580 | |
| 39 | Ejector disc | 936597 | 1 | | |
| 41 | Nut (disc) | 943236 | 1 | | |
| 42 | Axle | 936603 | 1 | | |
| 43 | Switch "ON" | 936610 | 1 | Include item 44 | |
| 44 | Switch "OFF" | nss | 1 | | |
| 45 | Sleeve | n/a | 2 | | |
| 46 | Washer M8 | n/a | 2 | | |
| 47 | Dome nut M8 | n/a | 1 | | |
| 48 | Flat countersunk screw M5x6 | n/a | 2 | | |
| 49 | Magnetswitch (handle) | 918562 | 1 | | |
| 50 | Magnetswitch (lid) | 918562 | 1 | | |
| 51 | Washer M8 | n/a | 4 | | |
| 52 | Hexagon button cap screw M8x60 | n/a | 1 | | |
| 53 | Motor bracket | n/a | 1 | | |
| 54 | Hexagon cap screw M6x15 | n/a | 4 | | |
| 55 | Hexagon button cap screw M6x95 | nss | 3 | Available in 936580 | |
| 56 | Hexagon button cap | nss | 1 | Available in 936580 | |
| 57 | Key 5x10mm | n/a | 1 | | |
| 58 | Cover bearing | 943243 | 1 | | |

| | | | | | |
|---|---|---|---|---|---|
| 59 | Oil seal (40x28x7mm) | 943250 | 1 | | |
| 60 | Bearing (6204RZ) | 943267 | 1 | | |
| 61 | Bushing | n/a | 1 | | |
| 62 | Flat countersunk screw M4x30 | n/a | 3 | | |
| 63 | Nut M8 | n/a | 2 | | |
| 64 | Bearing (6203RZ) | 940686 | 1 | | |
| 65 | Hexagon cap screw M8x25 | n/a | 2 | | |
| 66 | Belt pulley (small) | 936627 | 1 | Available in 936580 | |
| 67 | Belt (3F4632) | 936634 | 1 | | |
| 68 | Belt pulley (large) | 936641 | 1 | | |
| 69 | Flange nut M14 | 943274 | 1 | | |
| 70 | Relay | 941935 | 1 | | |
| 71 | Bracket relay | n/a | 1 | | |
| 72 | Flat countersunk screw M5x6 | n/a | 2 | | |
| 73 | Bracket PCB | n/a | 1 | | |
| 74A | PCB Gen 3 | 941928 | 1 | Until batch HK068121-000158 only | |
| 74B | PCB Gen 4 | 961278 | 1 | From batch HK068121-000159 only | |
| * | PCB capacitor | 961285 | 1 | From batch HK068121-000159 only | |
| 76 | Clamp | n/a | 1 | | |
| 77 | Capacitor | 931196 | 1 | | |
| 78 | Bottom cover | n/a | 1 | | |
| 79 | Foot | 936689 | 1 | | |
| | | | | | |
| | | | | | |

**n/a -> not available** **nss -> not sold separately**

# Circuit diagram

| | | |
|---|---|---|
| **Hendi B.V.**<br>Steenoven 21<br>3911 TX Rhenen<br>The Netherlands | **Batch #**<br>HK-0907-19 and up | **Appliance part#**<br>231852 |
| | **Description** | |
| | Vegetable cutter heavy duty | |

| | | | |
|---|---|---|---|
| **Date** | 25-11-2026 | **Revision #** | 1.1_3 |
| **Revision** | Format updated<br>25-11-2026 Ceated set for upper housing | Added new PCB and capacitor | |

