Drawing

	Batch #	Appliance part#
Hendi B.V. Innovatielaan 6 6745XW De Klomp The Netherlands	000000 and up	154991
	Description	
	Griddle, half flat, half ribbed	

Date	29-10-2026	**Revision #**	V.01
Revision	First Bill of Materials (BOM)		

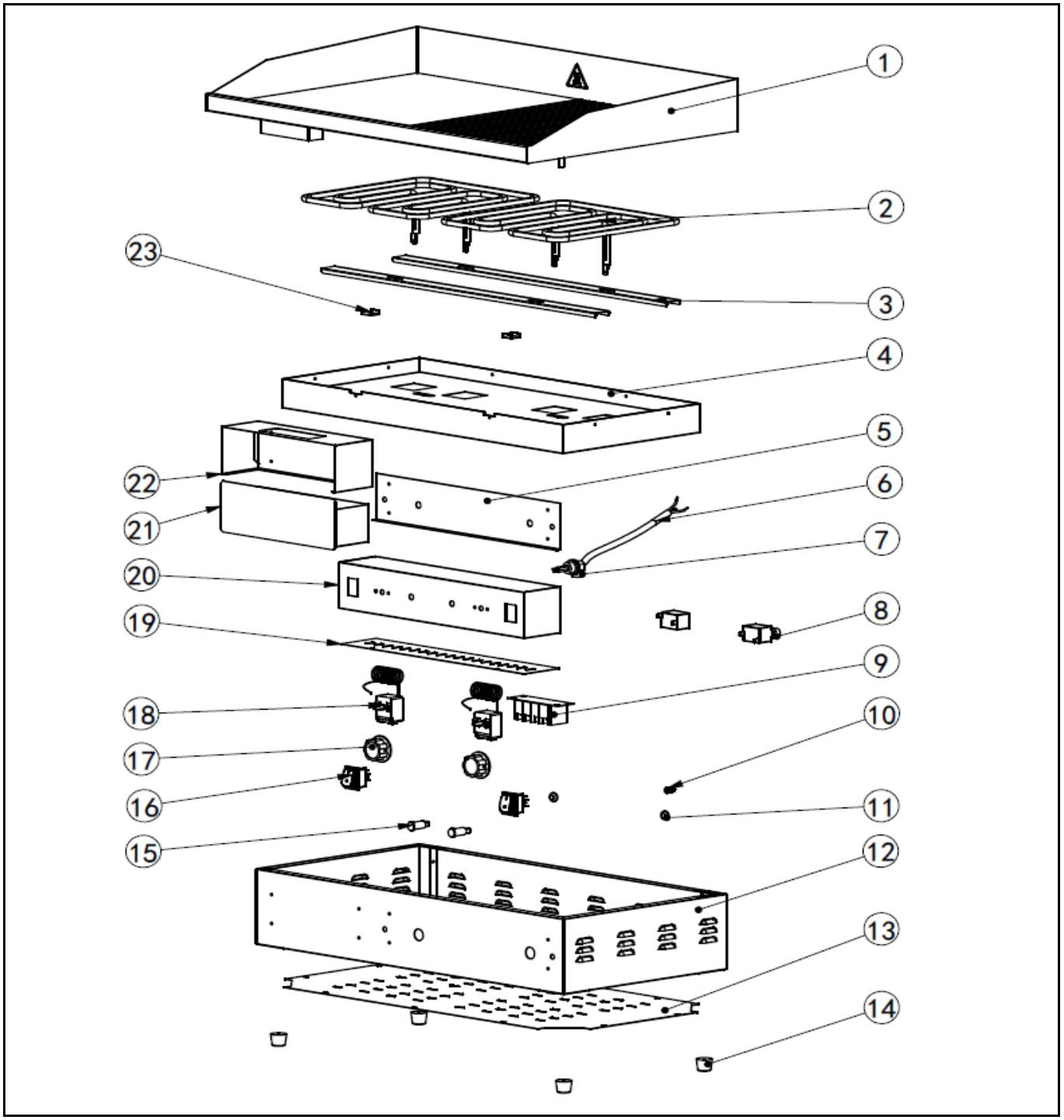

Bill of materials (BOM)

Hendi B.V.
Innovatielaan 6
6745XW De Klomp
The Netherlands

Batch #	Appliance part#
000000 and up	154991
Description	
Griddle, half flat, half ribbed	

Date	29-10-2026	**Revision #**	V.01
Revision	First Bill of Materials (BOM)		

Item	Description	Part#	Quantity	Remark	Picture
1	Griddle plate with backsplash	n/a	1		
2	Heating Element (2200W)	978696	2		
3	Element fixed plate	n/a	2		
4	Heating element cover	n/a	1		
5	Housing control box (back)	n/a	1		
6	Power cord	978702	1		
7	Pull relief	978719	1		
8	High limiter (340°C)	978726	2		
9	Terminal	n/a	1		
10	Protected Earth connector	n/a	1		
11	Protect ring	n/a	2		
12	Housing frame	n/a	1		
13	Housing panel (bottom)	n/a	1		
14	Feet	964286	4	Set of 4	
15	Indicator light (orange)	912003	2		
16	Switch	205426	2		
17	Thermostat knob	978672	2		
18	Thermostat	978689	2		
19	Housing control box (bottom)	n/a	1		
20	Housing control box (frame)	n/a	1		
21	Housing drip tray	n/a	1		
22	Drip tray	n/a	1		
23	Probe bracket	n/a	2		

n/a -> not available **nss -> not sold separately**

Circuit diagram

Hendi B.V. Innovatielaan 6 6745XW De Klomp The Netherlands	**Batch #** 000000 and up	**Appliance part#** 154991
	Description	
	Griddle, half flat, half ribbed	

Date	29-10-2026	**Revision #**	V.01
Revision	First Bill of Materials (BOM)		

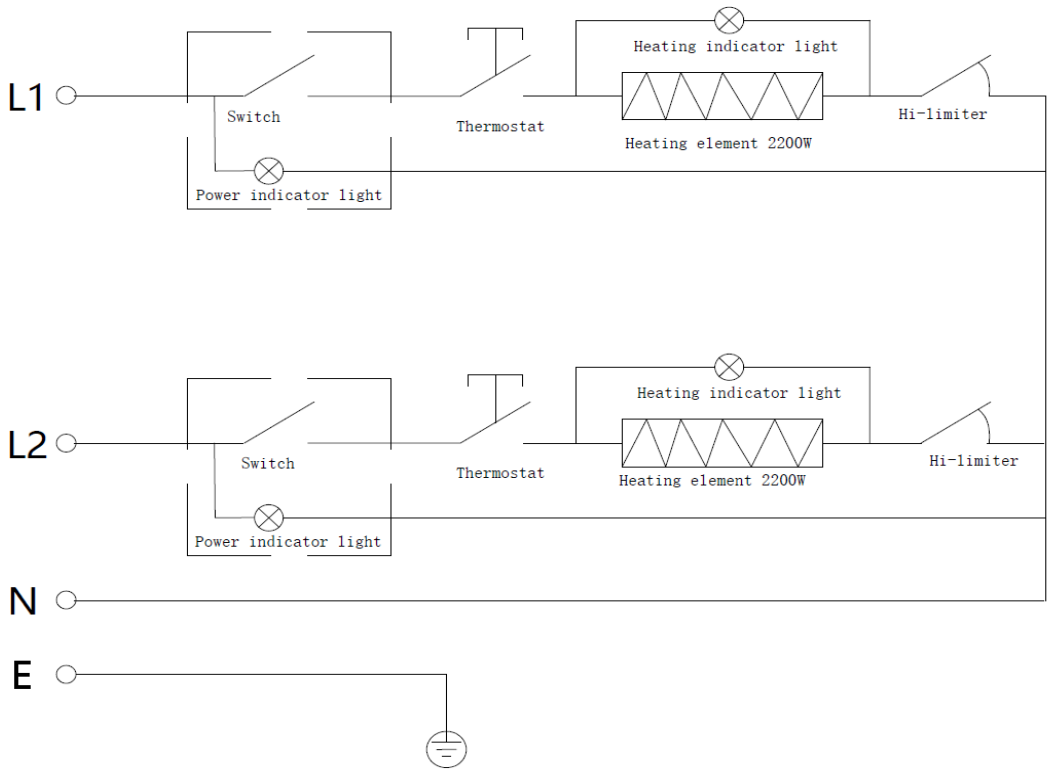

Dimensional drawing

Hendi B.V. Innovatielaan 6 6745XW De Klomp The Netherlands	**Batch #**	**Appliance part#**
	000000 and up	154991
	Description	
	Griddle, half flat, half ribbed	

Date	29-10-2026	**Revision #**	V.01
Revision	First Bill of Materials (BOM)		

