AMER★BOX®

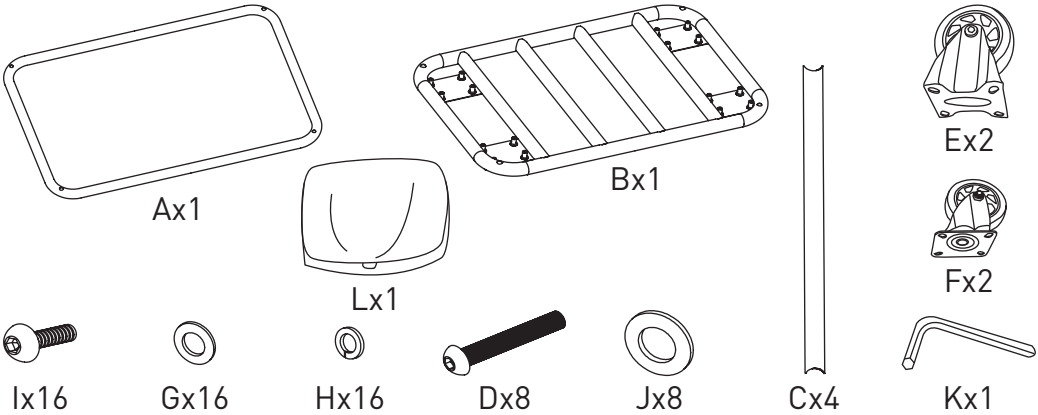


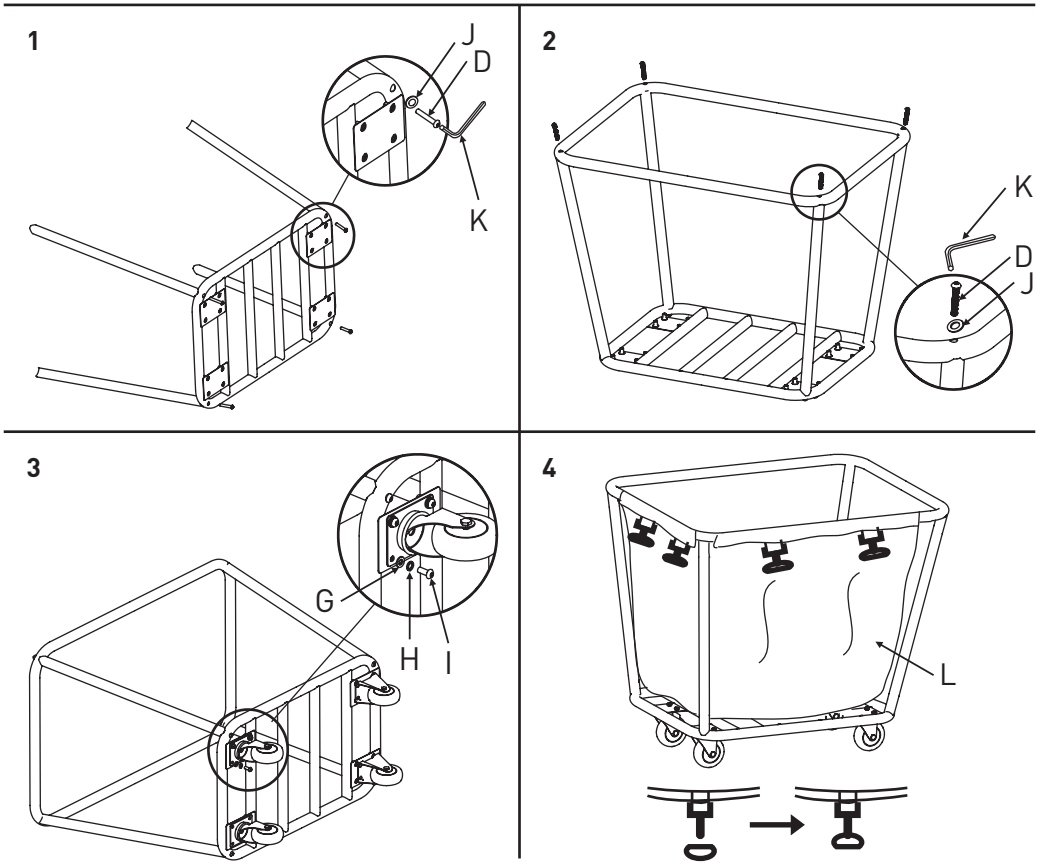


Fine Dine Sp. z o.o. Sp. k.
02-486 Warszawa Al. Jerozolimskie 200/2/0
Tel: +48 22 120 2000 Fax: +48 22 100 8392
e-mail: info@finedine.pl www.finedine.pl