Drawing

	Batch #	Appliance part#
Hendi B.V. Innovatielaan 6 6745XW De Klomp The Netherlands	000000 and up	274071
	Description	
	Sushi Display Black 42L	

Date	05-02-2026	**Revision #**	V.01
Revision	First Bill of Materials (BOM)		

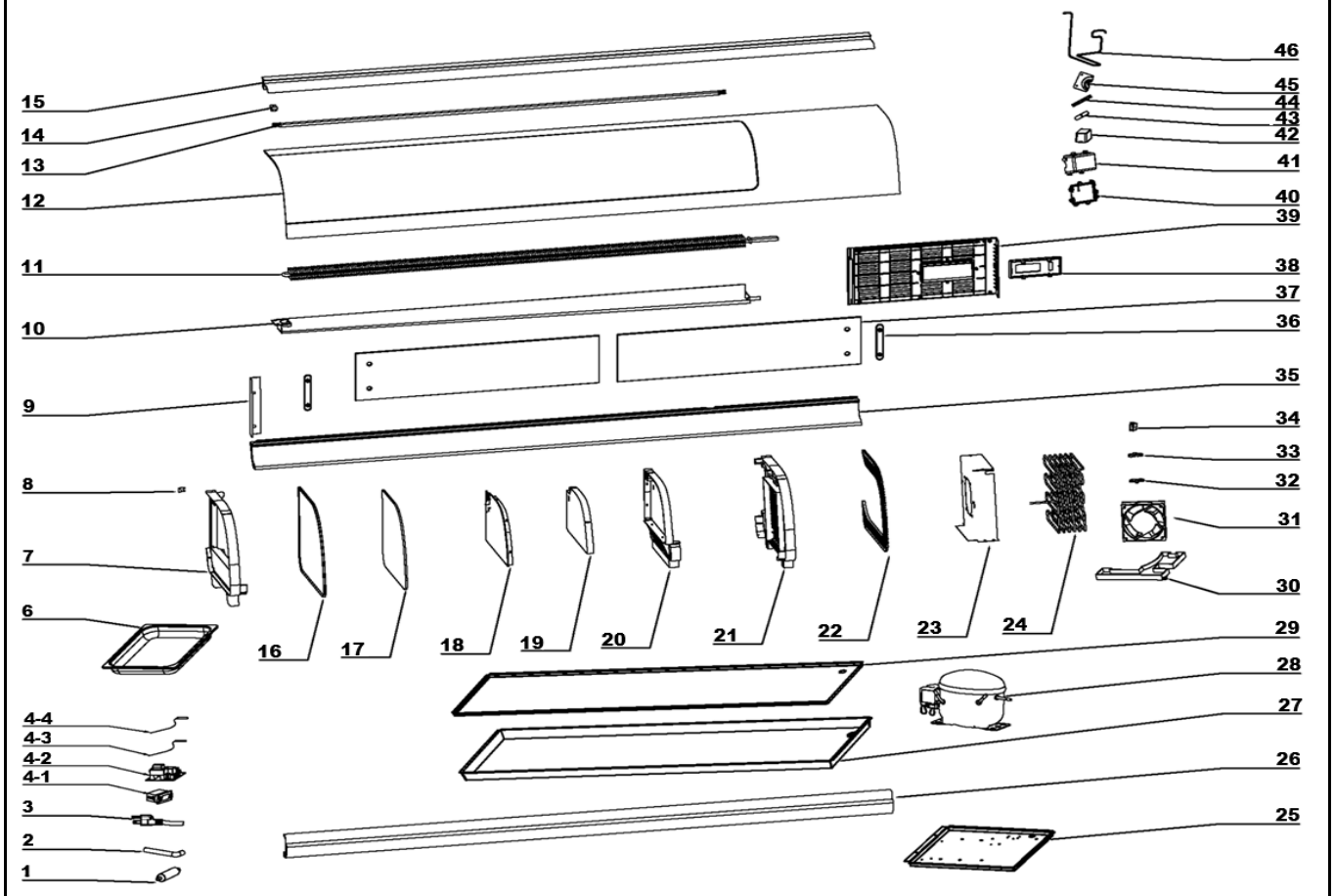

Bill of materials (BOM)

Hendi B.V.
Steenoven 21
3911 TX Rhenen
The Netherlands

Batch #	Appliance part#
000000 and up	274071

Description
Sushi Display Black 42L

Date	05-02-2026	**Revision #**	V.01
Revision	First Bill of Materials (BOM)		

Item	Description	Part#	Quantity	Remark	Picture
1	Dryer filter	n/a	1		
2	Water pipe	n/a	1		
3	Power cord	n/a	1		
4-1	Temperature display	nss	1		
4-2	Main PCB	965368	1	Incl. item 4-1, 4-3 and 4-4	
4-3	Defrost probe	nss	1		
4-4	Temperature probe	nss	1		
6	GN container 1/3, 40mm	801543	4		
7	Side bracket	n/a	1		
8	Glass bracket	n/a	1		
9	Glass door bracket	nss	1		
10	Drain pan (top)	n/a	1		
11	Evaporatr (top)	n/a	1		
12	Curved front glass	972366	1		
13	LED light	972373	1		
14	LED light bracket	n/a	3		
15	Curved glass bracket	n/a	1		
16	Glass gasket	965405	1		
17	Side glass panel	965412	1		
18	Seperator cover	n/a	1		
19	Seperator insulation	n/a	1		
20	Seperator	n/a	1		
21	Side panel (left)	n/a	1		
22	Decorative plate	n/a	1		
23	Condenser bracket	n/a	1		
24	Condenser	n/a	1		
25	Compressor bracket	n/a	1		
26	Housing bracket (front)	n/a	1		
27	Housing bracket	n/a	1		
28	Compressor (HVM10AA)	n/a	1		
29	Bottom panel	n/a	1		
30	Drian pan (bottom)	n/a	1		
31	Condenser fan	965429	1		
32	Pull relief "A"	n/a	1		
33	Pull relief "B"	n/a	1		
34	Switch	965436	1		
35	Housing bracket (back)	n/a	1		
36	Door handle	965443	2		
37	Door glass	972380	2		
38	Switch apnel	n/a	1		
39	Housing cover	n/a	1		
40	Connection box cover	n/a	1		
41	Connection box cover	n/a	1		
42	LED driver	972397	1		
43	Coolant tube	n/a	1		
44	End cap gasket	n/a	2		
45	Evaporator bracket	n/a	1		
46	Coolant tube	n/a	1		

n/a -> not available **nss -> not sold separately**

Circuit diagram

	Batch #	Appliance part#
Hendi B.V. Steenoven 21 3911 TX Rhenen The Netherlands	000000 and up	274071
	Description	
	Sushi Display Black 42L	

Date	05-02-2026	**Revision #**	V.01
Revision	First Bill of Materials (BOM)		

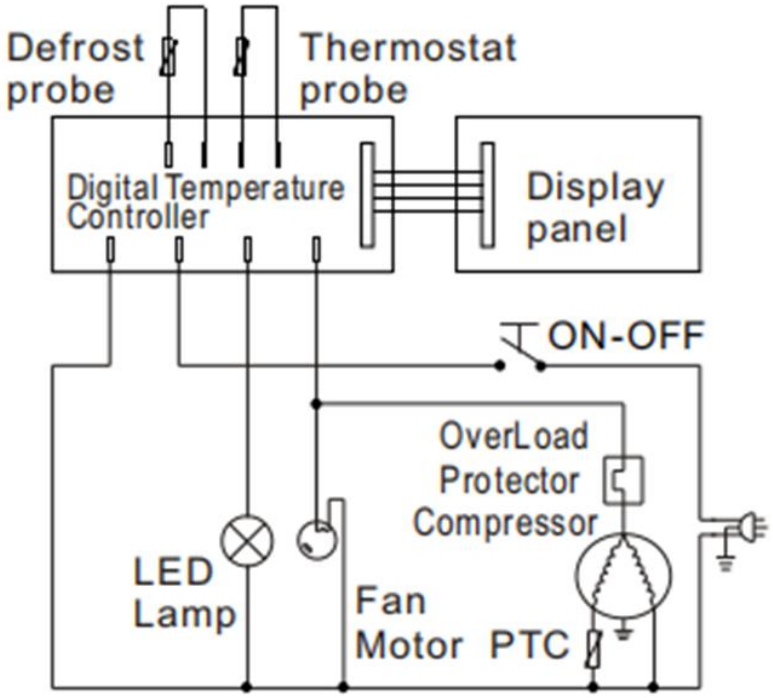

Dimentional drawing

	Batch #	Appliance part#
Hendi B.V. Steenoven 21 3911 TX Rhenen The Netherlands	000000 and up	274071
	Description	
	Sushi Display Black 42L	
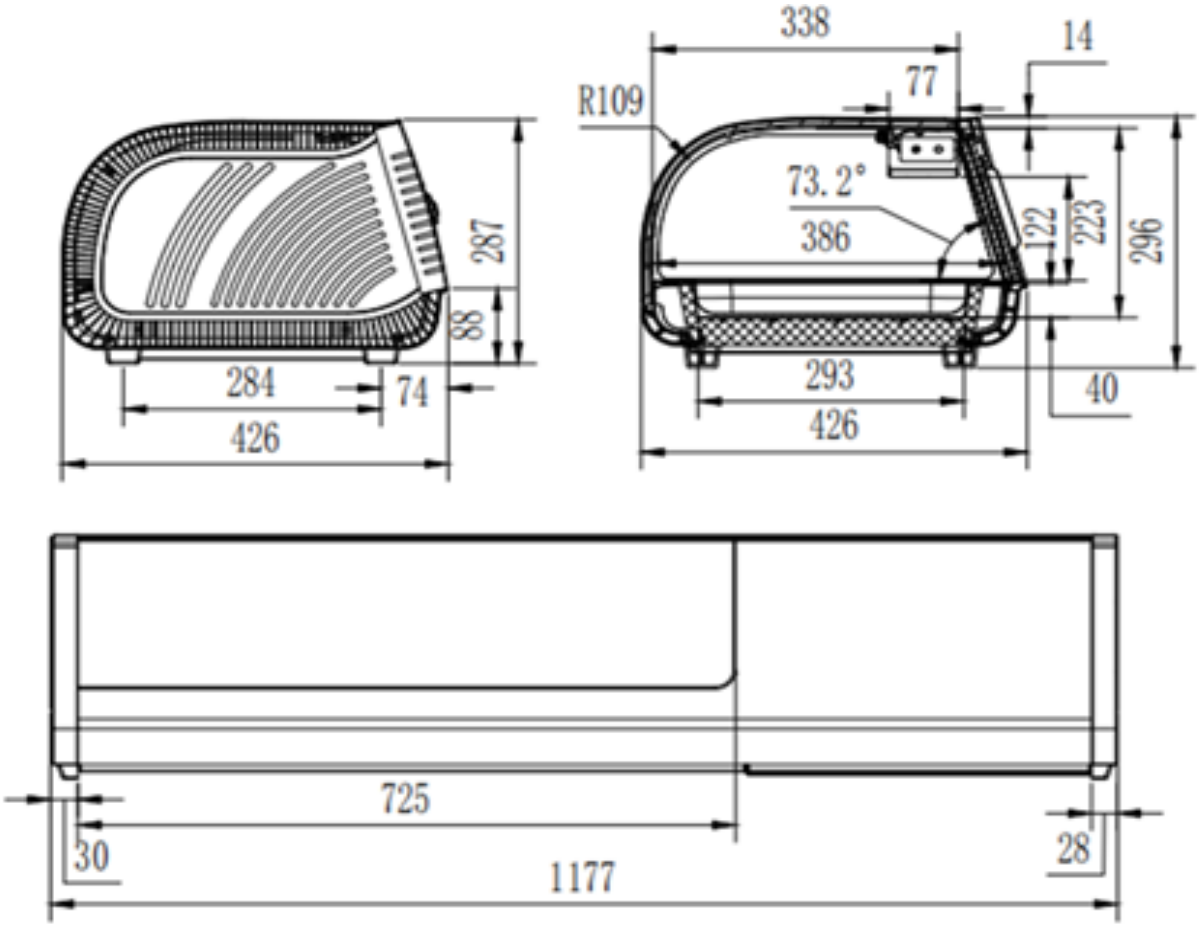
Date	05-02-2026	**Revision #**	V.01
Revision	First Bill of Materials (BOM)